INSTALLATION DIMENSIONS

	External Dimensions			Base Drilling					Door Drilling			
Model	Width	Height	Depth	B1	B2	B3	B4	B5	D1	D2	D3	D4
KK4F	306	348	520	56	94	368	406	231	-	-	-	-
KK6F	306	348	520	56	94	368	406	231	30	134	239	216

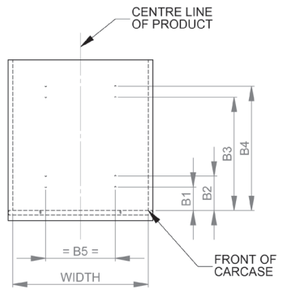

TOP VIEW

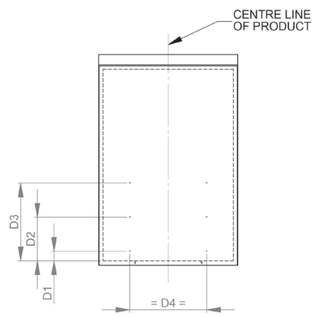

FRONT VIEW

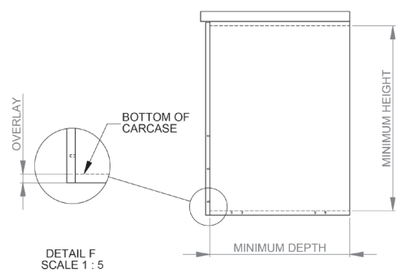

SIDE VIEW

Hideaway® Deluxe Range Floor Mount Installation Instructions

PLEASE READ ALL INSTRUCTIONS BEFORE YOU BEGIN INSTALLING

Important Installation Information for Handle Pull Models:

For handle pull models the stated product installation width applies to installations where the door fully clears the cabinet opening and may be hinge dependent. The top hinge should be a minimum of 150mm from the top of the door panel and additional carcase width may be required.

Fastener Identification:

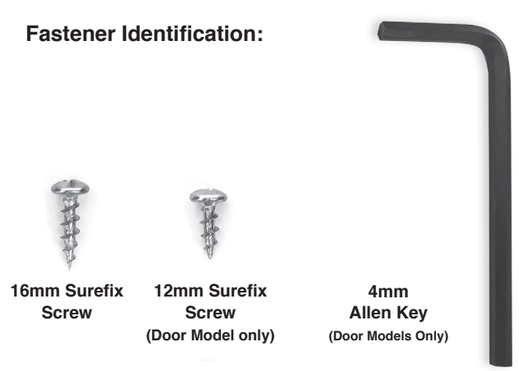

16mm Surefix Screw

12mm Surefix Screw
(Door Model only)

4mm Allen Key
(Door Models Only)

CONTACT

Need more info?

NEW ZEALAND **Phone** 09 426 7456 **Email** info@hideawaybins.co.nz **Web** www.hideawaybins.co.nz

AUSTRALIA **Freephone** 1800 042 642 **Email** info@hideawaybins.co.nz **Web** www.hideawaybins.com.au

NZ Patent No. 530285
AUS Patent No. 2004240179

NKBA National Kitchen & Bathroom Association - NZ

NEW ZEALAND MADE

Hideaway® deluxe

INSTALLATION INSTRUCTIONS START HERE

Step 1 - Install the floor mount bin within the cupboard (refer to the Installation Dimensions on the back page)

- With the bin standing on the floor mount brackets, fully extend the runners and remove the buckets.
- Close the runners fully.

FLOOR MOUNT HANDLE PULL MODELS ONLY

- Place the unit inside the cabinet in the desired location (ideally place the bin in the centre of the space provided). Secure to base of cabinet using screws provided. Mounting holes are located at the base of the floor mount brackets.
- If hinges are used on the door that do not allow the handle of the bin to clear the opening fully, allow an extra 10mm width.
- Move on to step 5.

FLOOR MOUNT DOOR PULL MODELS ONLY

- Place the unit inside the cabinet in the desired location (ideally place the bin in the centre of the space provided). Secure to base of cabinet using screws provided. Mounting holes are located at the base of the floor mount brackets.
- Move on to step 2.

Step 2 – Predrilling the Door Panel (Door Pull Models Only)

- Mark the vertical centre line of the product down the rear of the door panel.
- Mark the overlay at the bottom of the door panel.
- With reference to the Installation Dimensions mark the D2 Door Mount positions.
- Drill a 2mm hole 10mm deep at each of the marked positions.

Step 3 – Remove the inner runner with collar and door bracket attached (refer FIG 3 & 4)

- Fully extend the runners.
- Find the black levers located on the outer side of both the left and right runner.
- Simultaneously, push the left lever up and the right lever down and pull inner of the runners towards you until it separates completely from the unit. Set runner inner (with collar and door bracket attached) aside in a safe location.
- Push the outer runners attached to the top mounting panel back inside the unit.

Step 4 – Mounting and Adjusting the Door Panel (Door Pull Models Only) Refer FIG 2

- Position the door bracket on the door panel and align with the predrilled holes.
- Secure the door bracket using a 12mm Surefix Screw in each of the 2 vertical slots.
- Reattach the runner inner – Refer to FIG 4.
    1. Ensure the outer runners attached to the mounting panel are pushed as far as they will go into the unit.
    2. Ensure the inner slider is forward as far as it will go.
    3. Line up the inner runners (with the collar and door bracket attached) to the outer runners.
    4. Push the inner runners into position until the unit is fully closed. There may be some resistance when pushing the unit closed but the runner should operate smoothly after reassembly.
- Adjust the angle of the door panel by loosening the two M6 nuts and bolts, moving the door panel so it is parallel with the carcase and retightening the M6 nuts and bolts.
- Adjust the vertical position of the Door Panel by loosening the 2 Surefix Screws in the vertical slots and moving the panel as required.
- Drill a 2mm pilot hole 10mm deep at the centre of each of the horizontal slots.
- Secure the door panel using 12mm sure fix screws through the 4 horizontal slots.
- If required adjust the horizontal position of the door panel by removing the 2 screws in the vertical slots, loosening the screws in the horizontal slots, adjusting the panel position and retightening the screws in the horizontal slots.
- Reinstall the 2 screws into the vertical slots. Additional pilot holes may need to be drilled.

Step 5 – Place the bin bucket(s) into the collar.

- Check that the bin opens and closes smoothly and that there is no contact between the bin and the mounting panel.
- Please leave the Care and Maintenance instructions inside the bucket for the owner.

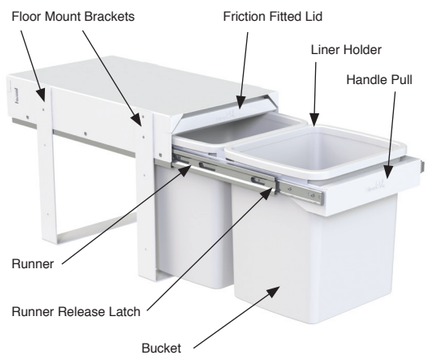

FIG 1 - Bin Parts

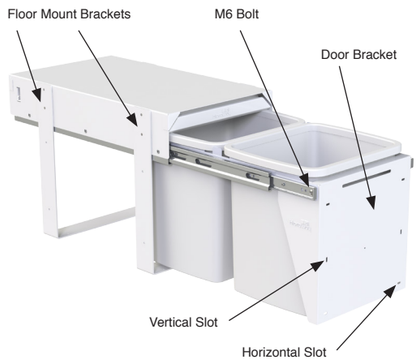

FIG 2 - Door Pull Model

Runners engaged - push left lever down and right lever up

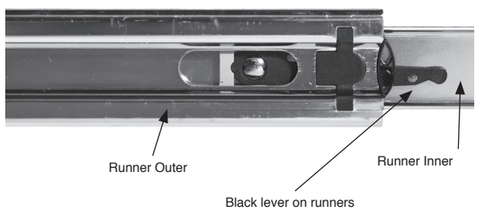

FIG 3

Runners disengaged - pull the runner inner clear of the outer

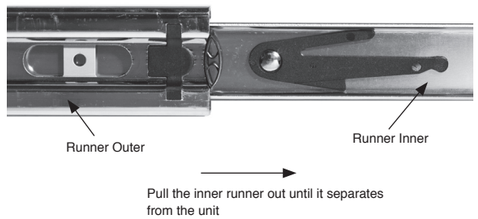

FIG 4