INSTALLATION DIMENSIONS

Model	Width	Height	Depth	T1	T2	T3	S1	S2	S3	S4	D1	D2	D3	D4
KK3H	260	340	368	30	329	158	37	287	-	50	-	-	-	-
KK5D	260	340	368	30	329	158	37	287	-	50	106	210	315	178
KK2H	260	450	368	30	329	158	37	287	-	50	-	-	-	-
KK2D	260	450	368	30	329	158	37	287	-	50	106	210	315	178
KK7H	340	625	417	30	381	238	37	197	357	50	-	-	-	-
KK8D	340	625	417	30	381	238	37	197	357	50	98	202	307	252
KK4H	300	340	520	30	482	202	34	209	384	50	-	-	-	-
KK6D	300	340	520	30	482	202	34	209	384	50	106	210	315	216
KK12H	300	450	520	30	482	202	34	209	384	50	-	-	-	-
KK12D	300	450	520	30	482	202	34	209	384	50	106	210	315	216

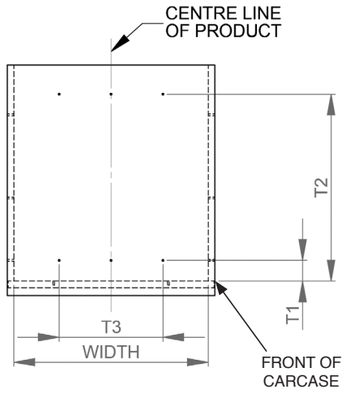

CARCASE TOP VIEW

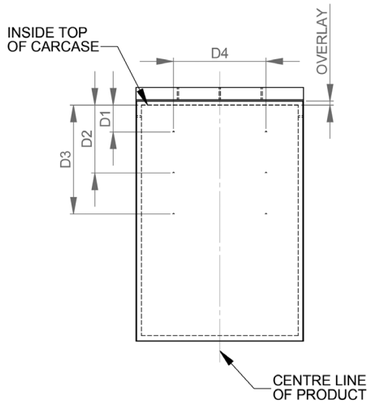

DOOR FRONT VIEW

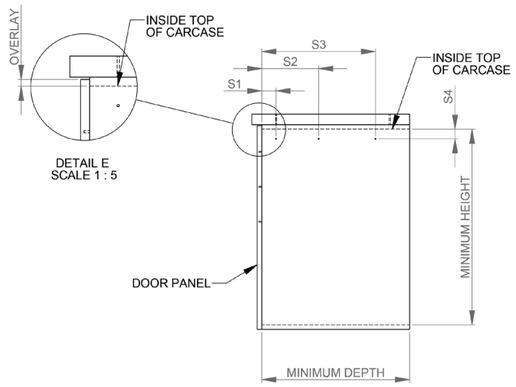

CARCASE SIDE VIEW

CONTACT

Need more info?

NEW ZEALAND **Phone** 09 426 7456 **Email** info@hideawaybins.co.nz **Web** www.hideawaybins.co.nz

AUSTRALIA **Freephone** 1800 042 642 **Email** info@hideawaybins.co.nz **Web** www.hideawaybins.com.au

NKBA™ National Kitchen & Bathroom Association - NZ

Hideaway® deluxe™

Hideaway® deluxe range installation instructions

PLEASE READ ALL INSTRUCTIONS BEFORE YOU BEGIN INSTALLING

Important Installation Information for Handle Pull Models:

For handle pull models KK2H, KK3H, KK4H, KK12H, KK7H: If hinges are used that do not allow the door to clear the opening fully, allow an extra 10mm width. Installation also requires that the top door hinge be 150mm from the top of the door to allow clearance for the bin handle. Refer to our website or brochure for the measurements related to your Hideaway Bin.

Fastener Identification:

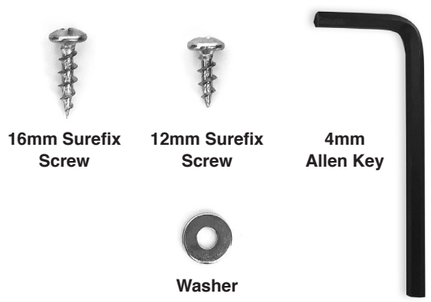

16mm Surefix Screw

12mm Surefix Screw

4mm Allen Key

Washer

INSTALLATION INSTRUCTIONS START HERE

Step 1 - Separate the runner components (see Fig 2a & 2b)

- Place the mounting panel upside down on a flat surface with the runners facing upwards.
- Fully extend the runners.
- Find the black levers located on the outer side of both the left and right runner.
- Simultaneously, push the left lever down and the right lever up and pull inner of the runners towards you until it separates completely from the unit. Set runner inner with collar, handle/door bracket attached aside in a safe location.
- Push the outer runners attached to the mounting panel back inside the unit.

Step 2 - Remove the friction-fitted lid from mounting panel (see Fig 3a, 3b & 3c)

- Mounting panel should still be upside down on a flat surface with the runners facing upwards.
- To remove the friction-fitted lid - push firmly down on the lid at the back of the unit.
- Push firmly, distributing pressure to both sides of lid to ensure the lid clears the hooks located on the left and right hand sides of the mounting panel (fig 3b).
- Simultaneously, pull the friction-fitted lid forwards until it clears the mounting panel (fig 3c).
- Pull the foam pad clear of the mounting panel. Set aside, leaving the plastic cover on.

Step 3 – Predrill the Carcase

- Refer to the Installation Dimensions on the back page of these instructions.
- Mark out the mounting positions to be used and drill a 2mm hole 10mm deep at each point.

Step 4 – Installing the Mounting Panel in the Carcase

- Position the mounting panel within the carcase.
- Use the 16mm Surefix screws and the washers in top mount locations.
- Use the 16mm Surefix screws in side mount locations. Note: A #1 Square Drive or #2 Phillips Drive bit may be used.

Step 5 - Reinstall the friction-fitted lid and foam into mounting panel

- Rest the foam on top of the friction-fitted lid - the flat side of the friction-fitted lid should be towards the ground with the folds facing upwards.
- Slide the friction-fitted lid and foam inside the mounting panel, stopping just before the rear hooks. (Note: the large fold on the friction-fitted lid sits at the front of the unit, and the rear of the lid has the slots which reconnect with the hooks located on the mounting panel at the rear).
- Simultaneously, with one hand, push firmly up on the back of the friction-fitted lid, push the lid above the hooks and drop into location. Whilst this is happening, with the other hand push the front of the lid upwards to ensure it rests on the metal support - located at the front of the mounting panel (fig 3c).
- The lid should move up and down slightly, with ease indicating correct installation.

Step 6 – Predrilling the Door Panel (Door Pull Models Only)

- Mark a vertical centre line down the rear of the door panel.
- Mark the overlay at the top of the door panel.
- With reference to the Installation Dimensions mark the D2 Door Mount positions.
- Drill a 2mm hole 10mm deep at each of the marked positions.

Step 7 – Mounting and Adjusting the Door Panel (Door Pull Models Only)

- Position the door bracket on the door panel and align with the predrilled holes.
- Secure the door bracket using a 12mm Surefix Screw in each of the 2 vertical slots.
- Reattach the runner inners – Refer to FIG 2.
    1. Ensure the runner outers attached to the mounting panel are pushed as far as they will go into the unit.
    2. Ensure the runner inners are as far forward as they will go.
    3. Line up the runner inners (with the collar handle/door bracket attached) to the runner outers.
    4. Push the runner inners into position until the unit is fully closed. There may be some resistance when pushing the unit closed but the runner should operate smoothly after reassembly.
- Adjust the angle of the door panel by loosening the two M6 nuts and bolts, moving the door bracket so it is parallel with the carcase and retightening the M6 nuts and bolts.
- Adjust the vertical position of the Door Panel by loosening the 2 Surefix Screws in the vertical slots and moving the panel as required.
- Drill a 2mm pilot hole 10mm deep at the centre of each of the horizontal slots.
- Secure the door panel using 12mm sure fix screws through the 4 horizontal slots.
- If required adjust the horizontal position of the door panel by removing the 2 screws in the vertical slots, loosening the screws in the horizontal slots, adjusting the panel position and retightening the screws in the horizontal slots.
- Reinstall the 2 screws into the vertical slots. Additional pilot holes may need to be drilled.

Step 8 - Place bin bucket/s into checkouts on collar

- Fully extend the runners.
- Place bucket/s into the checkouts provided on the collar of the unit. If the bucket/s do not sit within these checkouts the unit will not close properly.
- Please leave the Care and Maintenance Instructions inside the bucket for the owner.

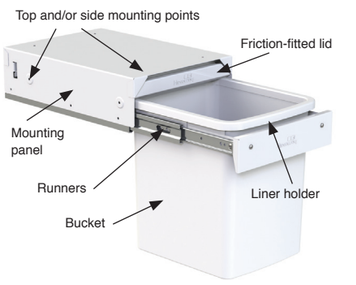

FIG 1 - Bin Parts

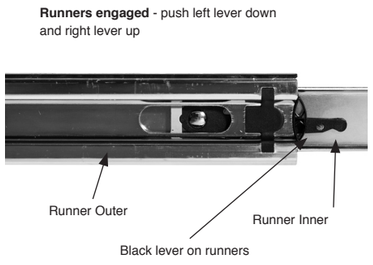

FIG 2a - Removing Runners

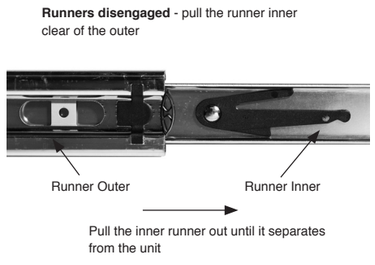

FIG 2b - Removing Runners

Push firmly on the back of the unit to ensure the lid clears the hooks located on the right and left hand sides of top mounting panel

FIG 3a

FIG 3b

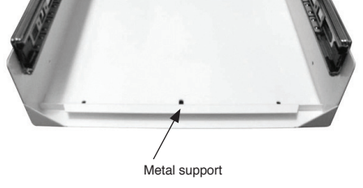

The unit should look like this with the friction fitted lid and and foam pad removed

FIG 3c