Hideaway®

EFFICIENCY, SUSTAINABILITY AND LIFESTYLE

Sort, store and recycle with a Hideaway Bin.

INCLUDING THE MULTI-AWARD WINNING PRODUCT RANGE

Concelo®

BY HIDEAWAY

2020

NEW ZEALAND MADE®

hideawaybins.com.au

GALVIN

KITCHEN, BATHROOM, LAUNDRY... ANYWHERE

HIDEAWAY BINS - Manage, sort and store your waste, recycling and laundry with a Hideaway Bin.

A leading-edge, practical hidden bin system that fits effortlessly into your environment to assist with everything from hygienically disposing of waste and sorting your recycling to separating and storing your laundry.

Four intelligently designed, New Zealand made ranges are available: Concelo®, Soft Close, Deluxe and Compact, offering a simple and stylish space-saving solution.

With each of the four ranges offering distinctive features, there is sure to be a Hideaway Bin to suit the requirements of any residential or commercial project.

Our **Waste Management Guide** on pages 3/4 will help you decide which Hideaway Bin is right for you.

Hideaway®

hideawaybins.com.au

HIDEAWAY BINS EFFICIENCY SUSTAINABILITY LIFESTYLE

As a manufacturing business and as individual New Zealanders, we recognise and value the unique and precious environment we live and work within. We strive to protect this environment through responsible business practices and sustainable waste and recycling habits.

Our Hideaway Bin systems are designed and produced to help our customers to achieve more sustainable waste practices within their own homes and workplaces.

The topic of managing waste and recycling has never been stronger, and the team at Hideaway Bins take great pride in responsibly recycling and re-using products within our business and manufacturing processes.

To ensure this, we have put a number of practices in place so that our environmental impact is reduced and our products are environmentally friendly.

This includes:

- Ensuring that we re-use cardboard and plastic packaging.
- We recycle waste cardboard, plastic packaging and any metal rejects.
- Our plastic buckets are made from 100% virgin material – making them completely recyclable.
- The waste from the moulding process is ground for re-use by others.

WASTE MANAGEMENT GUIDE

WHICH BIN DO YOU NEED?

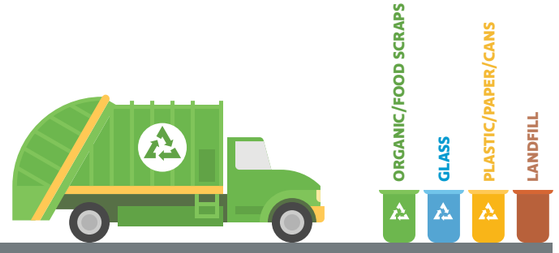

START HERE TO CHOOSE YOUR BIN SOLUTION...

Did you know that your bin is the most used appliance in your home?

With that in mind, it's important to choose a bin system that's simple to use, durable, easy to clean and one that makes your everyday waste and recycling routine effortless.

A Hideaway Bin solution will help you create sustainable waste and recycling practices in your household with as little impact to your lifestyle as possible.

As a nation, we are not great recyclers, and the majority of waste still goes to landfill. This not only wastes money, it is environmentally unsustainable.

A key to improving recycling and reducing waste is having a good waste management system.

Move through the 4 steps on the opposite page to give you a guide as to which Hideaway Bin solution would be suitable for your kitchen and your family.

For more information visit:
hideawaybins.com.au

CALCULATE THE VOLUME OF WASTE YOUR FAMILY PRODUCES EACH WEEK

Based on 60 litres of waste per person, per week, categorised into: landfill, recycling and compost.

USE THE TABLE BELOW FOR STEP 2 OPPOSITE.

LANDFILL	43%		26L	52L	104L	156L
RECYCLING	50%		30L	60L	120L	180L
COMPOST	7%		4L	8L	16L	24L
X EMPTIED	100% of waste	2x 15L buckets	4x (60L)	8x (120L)	16x (240L)	24x (360L)

EXAMPLE: with a twin 15L bin system, how often would you need to empty your bin each week? A larger bucket = fewer empties.

1. **HOW MANY** BUCKETS?

The number of buckets required depends on how many waste streams the waste needs to be separated into, and where those waste streams go.

Check with your local council: what is collected by local councils now, and what is planned for the future. Some councils use a comingled recycling system, while others separate recycling. Many councils are introducing organic (food scrap) collections in the future.

Consider your lifestyle – do you want to home compost food scraps? Would you like to separate soft plastics for recycling?

2. BUCKET **SIZE**

To calculate the volume of waste generated, consider the number of people in your home (see opposite).

Consider how often you want to empty your bin, and how much space you have.

3. BUCKET **PLACEMENT**

- Consider where waste is generated in your home, and where space is available to collect waste.
- **60-70% of all household waste is generated in the kitchen**, and this is the most critical waste bin system to consider.
- For kitchen waste, decide if the waste system will have all buckets combined in one bin unit or separated into two bin units. Using **two bin** units allows greater design flexibility.
- Consider **ergonomics:** keep in mind the bin is used 30+ times per day. Installing at bench height is recommended.
- Waste is also generated in the bathroom, and this typically includes items that can be recycled.

4. **FUNCTIONAL** BIN SYSTEM

AN IMPORTANT PART OF THE WASTE MANAGEMENT EQUATION IS A DURABLE, FLEXIBLE AND EASY TO CLEAN BIN SYSTEM FOR YOUR HOME.

The most common complaint about bin systems is they are dirty and smelly. Hideaway Bins are **easy to clean**, simplifying the removal of food and dirt traps, which can cause maintenance issues later if left unchecked. Hideaway Bins also have an innovative hands-free lid system to control odours.

INNOVATIVE FEATURES

THAT SEPARATE
HIDEAWAY BINS
FROM THE REST

BENCH HEIGHT INSTALLATION

Most Hideaway Bins have the option of being mounted to the top of kitchen cabinets directly under the benchtop. This means the bins are at the optimal height for clearing waste directly off a benchtop. This reduces the amount of bending required when disposing of waste - remember, your waste bin is one of the appliances you use most in the kitchen.

BUILT IN LID

Hideaway is the pioneer of waste bins with a built in self closing lid. When you have a hand full of rubbish, you don't want to be juggling between opening a door and lifting a lid while trying not to spill rubbish.

The Hideaway lid is mounted to the top of the bin system inside the cabinet, and closes itself onto the buckets when the bin is closed, to control odours while still keeping your hands free.

EASY ACCESS TO REAR BUCKET

All Hideaway Bins are designed with over extension runners. This makes it easy to remove or empty the bin, without having to compromise on space optimisation and ergonomics. The rear bucket can be removed independently of the front bucket from beneath the bench top.

FLEXIBLE MOUNTING OPTIONS

Hideaway Bins are designed with a range of mounting options to suit the environment they are installed within. Top mounting for easy access, side mounting for additional support and floor mounting for flexibility in compact spaces.

Concelo®

HIDEAWAY'S NEWEST BIN RANGE

REDEFINES

WHAT YOU SHOULD EXPECT FROM YOUR MOST USED APPLIANCE

Hideaway is proud to introduce Concelo®, the new standard in waste bins and laundry hampers.

The Concelo® range is the result of seven years of research, development and testing. It builds on Hideaway's strong heritage of quality and innovation to create the next generation of premium innovative hidden storage solutions.

The Concelo range has been designed to deliver a waste bin and laundry hamper without compromise. Every element of the range has been engineered and tested to ensure it delivers both the form and function that should be expected from a premium home appliance.

Concelo boasts not just a clean design aesthetic, but its Clip 'n' Clean features help keep your bin looking and smelling clean.

Managing waste can be a challenge, but Concelo is the easiest bin in the world to keep clean, while its new Active Lid helps control odours.

It not only takes all the best features you would expect from Hideaway and improves them, but it totally redefines what you should expect from your bin solution, wherever you need it.

MULTI-AWARD **WINNING PRODUCT**

reddot award 2019
winner

"A sophisticated product solution, this kitchen waste bin convinces thanks to its automatic, odour controlling closing mechanism."
- Judge's comment, Germany 2019

GOLD STAR 2018

AWISA 2018
GOLD STAR WINNER
FOR INNOVATIVE TECHNOLOGY

"Concelo is clever, smart, well designed and is superior to every other waste system on the market."
- Judge's comment, Australia 2018

PATENT PENDING: concelo.com/ip

Concelo®

AN EASY INSTALLATION FOR THE

TRADE

The trade spoke and Hideaway listened. Concelo® waste bins are designed for ease of installation.

kitchen | commercial | recycle station | 10 YEAR WARRANTY

View how simple Concelo is to install

SCAN ME

Concelo testimonial from Richard Cripps, director of Kitchens by Design

SCAN ME

CONCELO WASTE BIN FEATURES

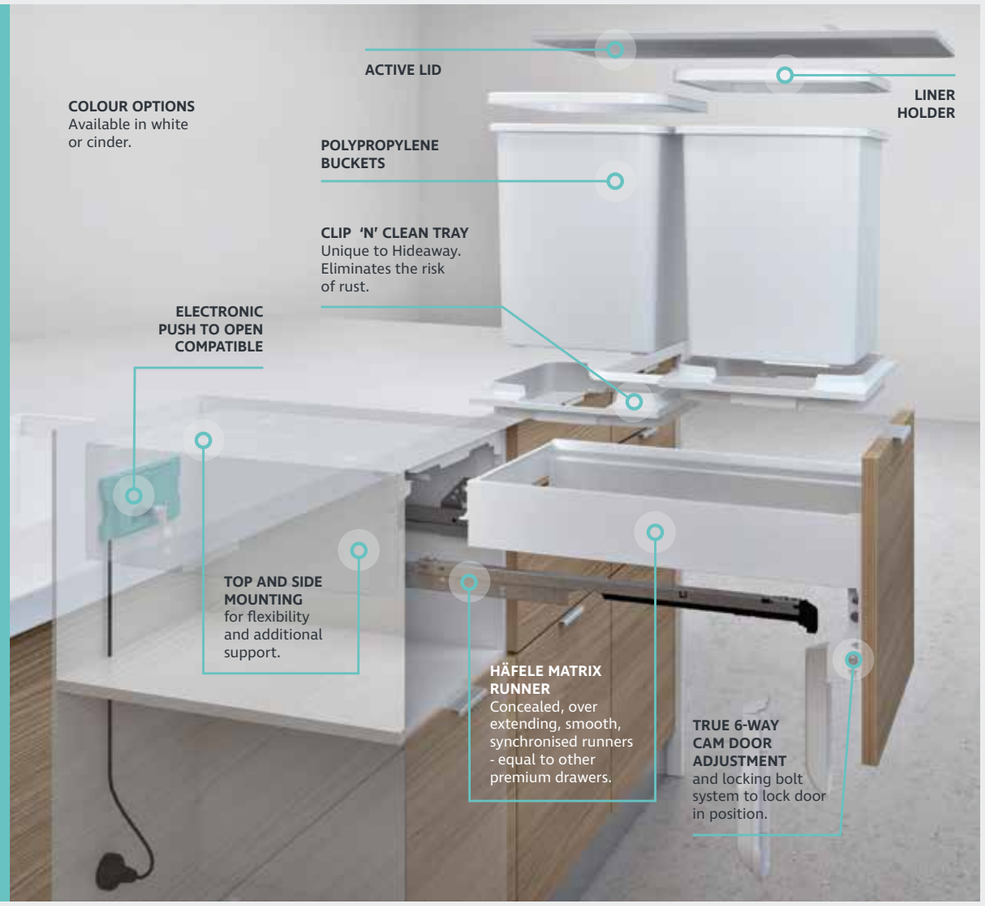

DOOR BRACKET ADJUSTMENT

2-piece door bracket design provides simple yet precise 6-way door adjustment with **LOCKING BOLT SYSTEM** to lock door position in place.

1. Horizontal adjustment +/- 2.5mm
2. Vertical adjustment +/- 2.5mm
3. Tilt adjustment +/- 0.75 degrees

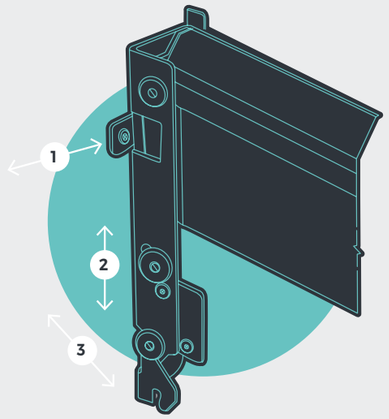

TOOL-LESS

COLLAR REMOVAL

Tool-less collar assembly and removal make installation quick and easy, in a manner similar to drawers.

SHORT, SHARP 'BUMP OFF', TYPICAL OF OTHER DRAWERS, TO REMOVE COLLAR FROM RUNNERS

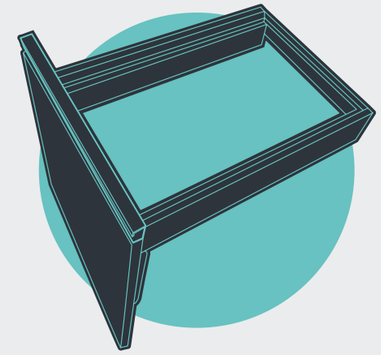

FLEXIBLE

MOUNTING OPTIONS

The frame of the bin can be fixed into the top or the side of the cabinet, or both for ultimate strength. Fixing through the top means the bin can fit any cabinet width, for ultimate design flexibility. When using standard cabinet widths with 16mm sides, the Concelo bin can be fixed to the sides of the cabinets, alleviating the need for additional top panels.

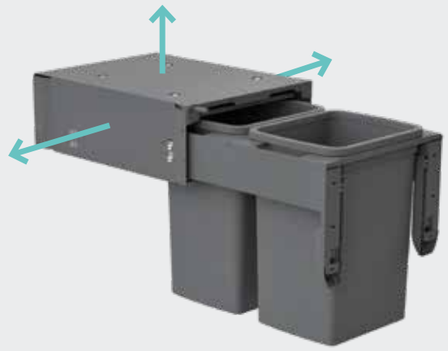

TECH SPECS

FOR ALL MODELS

Mount Options	Top and / or side mount
Pull Type	Door
Runner Specification	Häfele Matrix runner. German made, 45 kg soft close synchronized over extension runner with fluid damper, equal to premium drawers.
Materials	Frame – 1.0 mm zinc treated steel, powder coated.
	Drawer sides – aluminium, powder coated. Concealed runners.
	Active Lid / Clip'n'Clean Trays / buckets / liner holders – recyclable food grade, polypropylene.
Electronic Push To Open	Compatible with electronic push to open systems. Refer to page 12 for more information and technical specifications.
Bench Overhang Clearance	See page 18 for technical information.

Concelo.

A PREMIUM OPTION FOR THE

DESIGNER

A bin range with design front of mind. Sophisticated features, modern colour options and clean, concealed componentry.

Concelo in Arctic White makes it possible to have a premium bin system that matches ever popular white drawer systems. With easy clean components, it's possible to keep it looking crisp and white.

The new Cinder colour matches the trend for dark grey kitchen components and cabinetry.

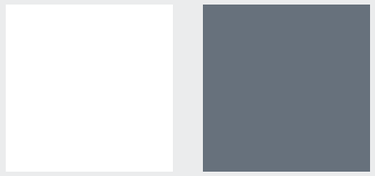

Concelo Arctic White

Concelo Cinder

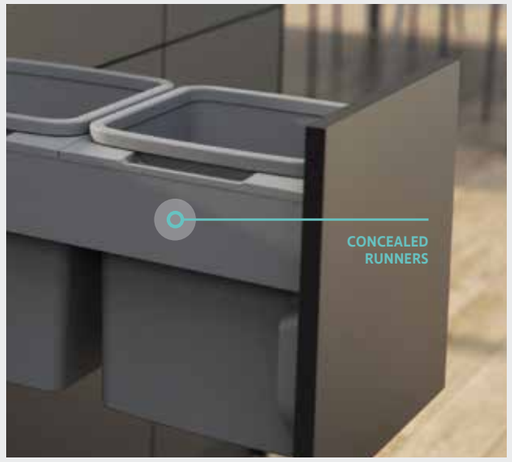

See additional features overleaf that the homeowner will love when you specify Concelo.

Scan the code opposite to view testimonials from kitchen designers who have used Concelo in their projects.

SCAN ME

Concelo testimonials from Toni Roberts, director of Kitchen Architecture and Celia Visser, director of Celia Visser Design.

COMPATIBLE WITH

ELECTRONIC PUSH TO OPEN

TRUE HANDS-FREE

Combined with the Active Lid, this provides the ultimate hands free bin which is so important when you have a handful of waste to dispose of. Your drawer front stays clean, and you can simply dispose of waste in one step.

Warranty: Concelo is warranted for use with Häfele Grass Sensomatic or Blum Servo Drive systems.

Refer to the technical guides on the Hideaway website for installation of electronic systems.

Note: Push To Open Accessories do not come with the Concelo Bin and must be ordered separately. See website for detail on parts required and installation.

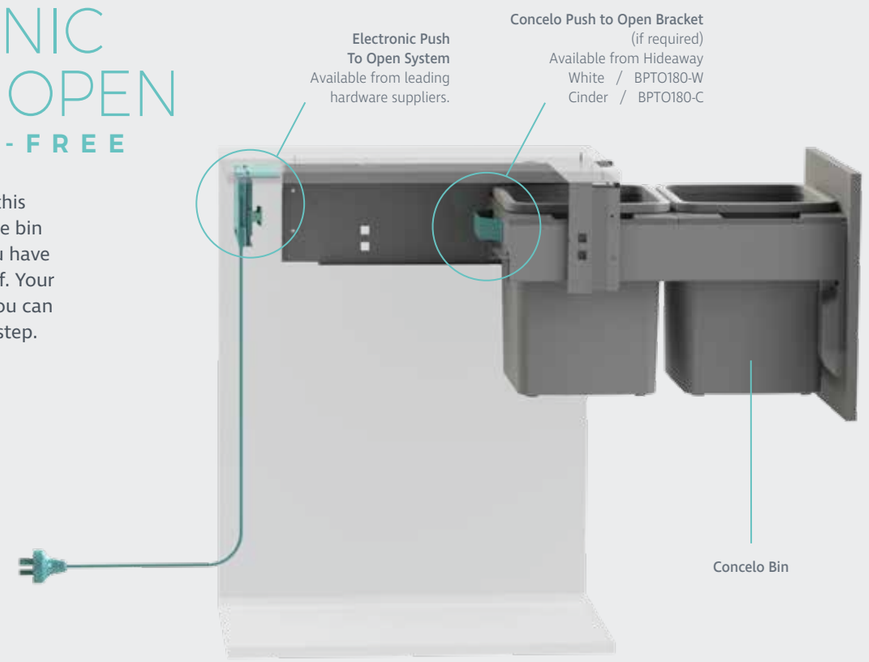

GERMAN

SYNCHRONISED OVER EXTENSION RUNNER

Häfele Matrix Runners - smooth synchronised runners with fluid damper for seamless quiet closing action – 45kg dynamic weight rating. Beautiful, sophisticated runners, equal to other premium drawers.

The over extension runner allows for easy access to the back bucket with bench height installation.

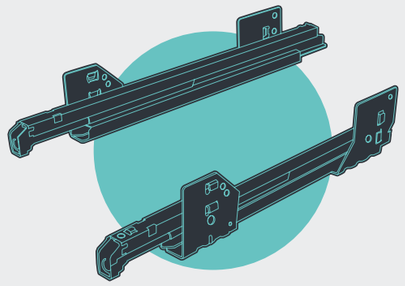

DESIGN

FLEXIBILITY

The frame of the bin can be fixed into the top or the side of the cabinet, or both for ultimate strength. Fixing through the top means the bin can fit any cabinet width, for ultimate design flexibility. When using standard cabinet widths with 16mm sides, the Concelo bin can be fixed to the sides of the cabinets, alleviating the need for top panels.

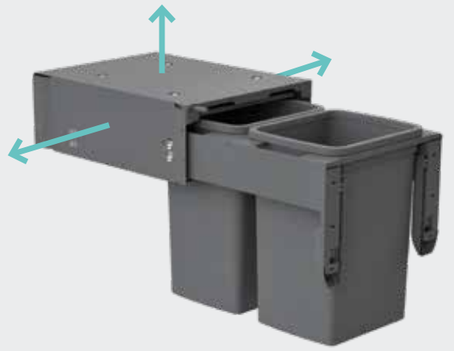

Concelo.

THE PERFECT WASTE SOLUTION FOR THE

HOME OWNER

Easy clean components can be effortlessly removed, cleaned and reinstalled in moments.

Made from stain resistant polypropylene, components are easily cleaned with soapy water. Simply clip them back into position in seconds. Concelo's Clip'n'Clean trays are not only easy to clean, they avoid any potential food traps in difficult to reach spaces.

Learn more about Concelo

SCAN ME

ACTIVE LID SYSTEM

Managing waste can be a challenge, especially the smell. Concelo overcomes this with its all new Active Lid, designed to help control odours.

The Active Lid is hidden from sight at the top of the bin inside the cabinet, and drops down to close over the buckets when the unit is closed.

The motion of the lid is synchronized with the opening and closing action of the unit, which lets you keep your hands free to simply drop waste into the bin.

The Active Lid has been designed so that it can very easily be removed and re-installed with the help of a cleverly designed lid tool!

COMPATIBLE WITH

ELECTRONIC PUSH TO OPEN

TRUE HANDS-FREE

Combined with the Active Lid, this provides the ultimate hands free bin which is so important when you have a handful of waste to dispose of. Your drawer front stays clean, and you can simply dispose of waste in one step.

See page 12 for technical details.

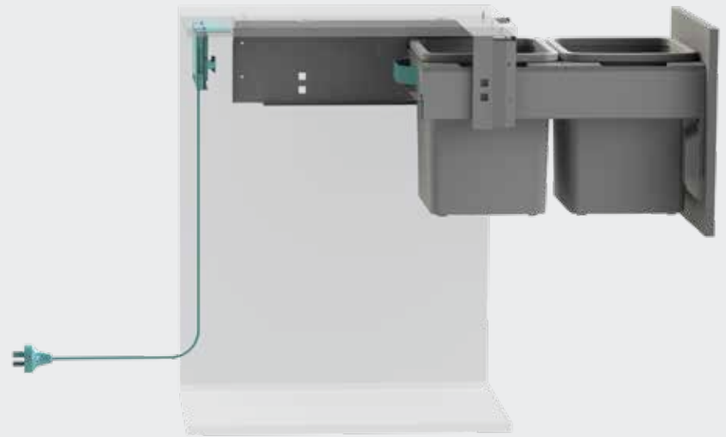

Concelo®

BY HIDEAWAY

THE ULTIMATE HIDDEN WASTE AND RECYCLING SOLUTION FOR YOUR HOME

CONCELO® WASTE & RECYCLING

15 LITRE
X 2 BUCKETS

CR215D-W
Arctic White

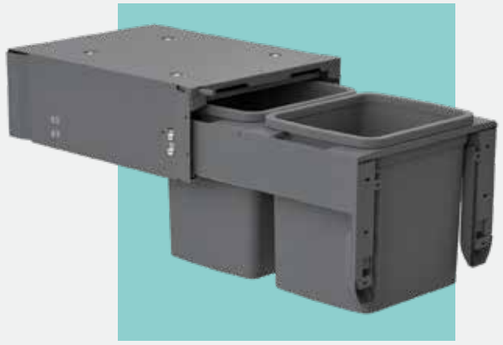

CR215D-C
Cinder

15 LITRE DIMENSIONS	Minimum* Cabinet Width	Minimum Internal Width	Minimum Internal Height	Minimum Internal Depth
	400 mm	368 mm	335 mm	525 mm

2x units can be installed within a 720mm standard carcass height providing a 4 bin recycling solution. Allows for a 16mm shelf.

20 LITRE
X 2 BUCKETS

CR220D-W
Arctic White

CR220D-C
Cinder

20LITRE DIMENSIONS	Minimum* Cabinet Width	Minimum Internal Width	Minimum Internal Height	Minimum Internal Depth
	400 mm	368 mm	440 mm	525 mm

*Assumes 16mm carcass

35 LITRE BUCKET
AIR VENT TECHNOLOGY

AIR ESCAPES THROUGH THE VENTS AS YOUR BIN LINER IS PUSHED INTO THE BUCKET CAVITY

The 35L bucket features Hideaway's air vent system: four air vents allow trapped air to escape through the lip of the bucket, as the bin liner is filled during use.

This unique design will eliminate the frustration of trapped air restricting your liner, maximising bin liner volume.

35 LITRE
X 2 BUCKETS

CR235D-W
Arctic White

CR235D-C
Cinder

35 LITRE DIMENSIONS	Minimum* Cabinet Width	Minimum Internal Width	Minimum Internal Height	Minimum Internal Depth
	450 mm	418 mm	640 mm	525 mm

BENCH OVERHANG CLEARANCE
Concelo Bins have been designed with over extension drawer runners which allow for a bench overhang of up to 40mm, allowing the back bucket to come clear independent of the front bucket. If more bench overhang clearance is required, please mount the bin lower in the cabinet.

ACCESSORIES - available in Arctic White or Cinder

Bucket 15L
Bucket 20L
Bucket 35L
Liner Holder 15L & 20L
Liner Holder 35L

Electronic Push to Open Kit - available from leading hardware suppliers

Concelo is warranted for use with Häfele Grass Sensomatic or Blum Servo Drive systems. See page 12 for more information.

Refer to the technical guides on the Hideaway website for installation of electronic systems.

Push to Open Bracket - available from Hideaway

BPTO180-W (Arctic White) BPTO180-C (Cinder)

To work with electronic push to open systems. Not required in some applications.
Refer to the technical guides on the Hideaway website for installation of electronic systems.

See page 32 for more details about our accessories

15L bucket with liner holder above to hold bin liner in place.

NEW

CONCELO® LAUNDRY HAMPERS

The Concelo® Laundry Hamper offers a sophisticated storage solution. Based on the same platform as the Red Dot award-winning Concelo® Waste Bin, the NEW Concelo® Laundry system continues to raise the bar in what should be expected from a laundry hamper.

Hide your laundry, store your extra linen or use as a removable washing basket - the Concelo Laundry Hamper is a high-quality storage solution for your home.

Two hampers can be installed side by side in your laundry to separate washing. Concelo Laundry Hampers can also be integrated into wardrobe or bathroom cabinetry to discreetly hide laundry. The large 60L hamper is big enough to cope with a family load of washing and still be easy to remove and carry. Made from light-weight polypropylene, it features air vents to reduce moisture, moulded handles for easy grip and a solid base to prevent drips.

This new design is packed with features to suit the needs of designer, the cabinet maker and the homeowner.

Two colour options are available: Arctic White and Cinder.

Ergonomic in design, Concelo hampers are designed to withstand the weight of wet washing. This innovative system is a must for your laundry!

bathroom laundry wardrobe

60 LITRE *LAUNDRY HAMPER*

CRL160D-W
Arctic White

CRL160D-C
Cinder

60 LITRE DIMENSIONS	Minimum* Cabinet Width	Minimum Internal Width	Minimum Internal Height	Recommended Minimum Internal Height	Minimum Internal Depth
	450 mm	418 mm	590 mm	630 mm (as per template)	525 mm

*Assumes 16mm carcass

CONCELO LAUNDRY FEATURES

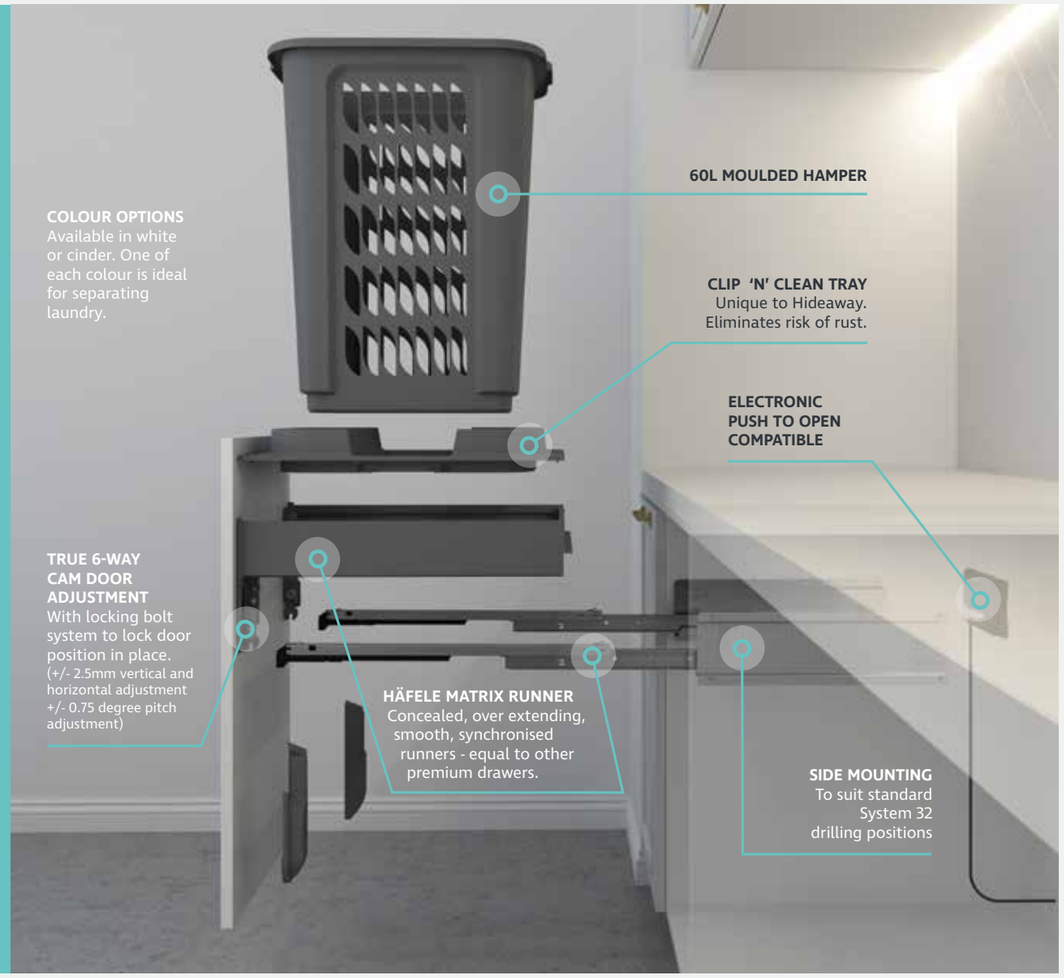

View how to install Concelo Laundry

SCAN ME

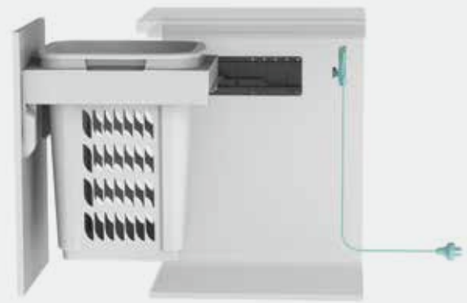

ACCESSORIES

Hamper 60L Arctic White and Cinder

Electronic Push to Open Kit

Available from leading hardware suppliers

Concelo is warranted for use with Häfele Grass Sensomatic or Blum Servo Drive systems.

Refer to the technical guides on the Hideaway website for installation of electronic systems.

BENCH OVERHANG CLEARANCE

Concelo Laundry Hampers have been designed with over extension drawer runners which allow for a bench overhang of up to 50mm, allowing the hamper to come clear of the bench overhang. If more bench overhang clearance is required, please mount the unit lower in the cabinet.

LAUNDRY CHUTE

Concelo Laundry unit is ideal for use under a laundry chute.

HAMPER OPENING: 400mm D x 320mm W

HIDEAWAY® CORE BIN RANGES

Innovative, intelligently designed, New Zealand made ranges that have crafted the Hideaway reputation:

- HIDEAWAY® **SOFT CLOSE**
- HIDEAWAY® **DELUXE**
- HIDEAWAY® **COMPACT**
- HIDEAWAY® **COMPACT FLOOR MOUNT**

Offering a simple and stylish space-saving solution.

Hideaway®

NEW ZEALAND MADE®

HIDEAWAY® **SOFT CLOSE** RANGE

SOFT CLOSE FEATURES

BUILT-IN LID
Removable, foam-sprung friction-fitted lid that covers over the bucket/s when the unit is closed, assisting in odour control.

CLINIKILL™
The lid has a Clinikill™ antibacterial powder coat to fight harmful bacteria, yeast and fungi keeping the bin solution hygienic.

SOFT CLOSE RUNNERS
High quality German ball bearing soft close runners.

BUCKETS
Made from a recyclable, food-grade polypropylene plastic. Buckets come complete with a liner holder to hold your bin liner in place.

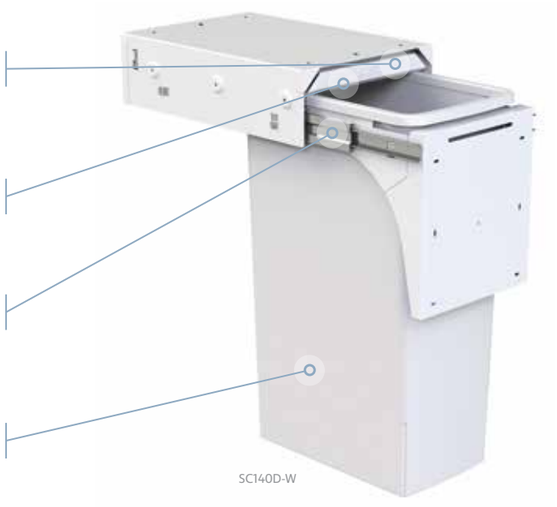

kitchen

commercial

recycle station

RANGE SPECIFICATIONS

METAL FRAME
1.2mm zinc treated steel, powder coated for durability.

AIR VENTS
Unique air vent system to maximise bin liner volume. 40L models only. See page 32 for more details.

MOUNTING OPTIONS
Top mount and/or side mount options to give greater design flexibility to install the bin in the optimal position.

ADJUSTMENT
Vertical, horizontal and pitch adjustment provided in door bracket. Forward/back adjustment is provided on the centre fixings of the top mount panel.

RUNNER RATING
Soft close over extension ball bearing runner. 47kg dynamic weight loading for SC140D & SC150D. 52kg dynamic weight loading for all other models.

INSTALLATION INSTRUCTIONS
All measurements given are internal (wall to wall) and are the minimum required to fit each unit.

INSTALLATION OPTIONS
DOOR PULL - One Step Action. The front fascia of the cabinet is attached to the door bracket of the Hideaway Bin. The bin is accessible by simply pulling open the cabinet door.

BENCH OVERHANG CLEARANCE
Hideaway Soft Close Bins have been designed with over extension drawer runners which allow for a bench overhang of up to 40mm, allowing the back bucket to come clear independent of the front bucket. If more bench overhang clearance is required, please mount the bin lower in the cabinet.

PRODUCT CODES
Hideaway Bin codes appear in blue (eg SC220D-W). Use these codes when placing an order for your Hideaway Bin.

2 x 15 litre buckets
317mm w x 340mm h x 520mm d

Available in:
SC215D-W / Door Pull / Arctic White

2 x units can be installed within the standard carcass height providing a four bin recycling solution.

NOTE: Standard carcass height is 720mm internal and allows for a 16mm shelf.

2 x 15 litre buckets
317mm w x 340mm h x 520mm d

Available in:
SC215D-G / Door Pull / Ghost Grey

2 x units can be installed within the standard carcass height providing a four bin recycling solution.

NOTE: Standard carcass height is 720mm internal and allows for a 16mm shelf.

2 x 20 litre buckets
317mm w x 450mm h x 520mm d

Available in:
SC220D-W / Door Pull / Arctic White

Ideal recycling solution for the average family.

2 x 20 litre buckets
317mm w x 450mm h x 520mm d

Available in:
SC220D-G / Door Pull / Ghost Grey

Ideal recycling solution for the average family.

1 x 40 litre bucket
285mm w x 645mm h x 420mm d

Available in:
SC140D-W / Door Pull / Arctic White

Large bucket capacity for those looking for a single bin waste or recycling solution for areas of limited width.

1 x 50 litre bucket
362mm w x 625mm h x 425mm d

Available in:
SC150D-W / Door Pull / Arctic White

Larger family or commercial or office kitchen.

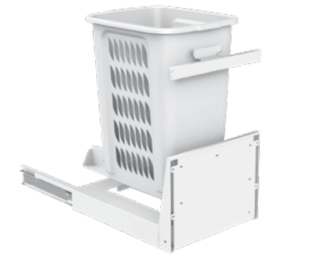

1 x 60 litre hamper
417mm w x 635mm h x 520mm d
Base Mount

Available in:
SCLBM160D-W / Door Pull / Arctic White

Ideal for under a laundry chute.

LAUNDRY CHUTE

Base Mount Laundry unit is ideal for use under a laundry chute.

HAMPER OPENING: 400mm D x 320mm W

SOFT CLOSE MODELS

HIDDEN **RECYCLING** STATION

COMMERCIAL **RECYCLING**

commercial

recycle station

Sustainable recycling practices in the workplace begin with making your recycling solution easy to use, durable and hygienic whilst remaining design focused.

Hidden from sight
Recycling bins placed in walkways can look unhygienic and be a real eye-sore. Integrate a hidden recycling station into a commercial environment to ensure a professional workplace with design front of mind.

Durability
The two ranges we recommend are: Concelo by Hideaway and Hideaway Soft Close. They have been designed with quality materials to ensure the units withstand the challenges posed in a commercial environment.

High quality runners are designed to hold up to 45kgs/52kgs and they over extend so the rear bucket can be easily removed from beneath the benchtop.

Hideaway buckets are made from virgin polypropylene which give them the durability to withstand the rigors of continual use in a commercial environment.

Smart Design Features
The control of odours is paramount within a commercial space. Hideaway Bins include a built-in lid that remains in the cupboard when the unit is open, but covers over the buckets when the unit is closed assisting in odour control.

See the Concelo range (page 7) and the Soft Close range (page 23) for more details.

NOTE: The Hideaway Compact range is designed for residentail use and is not recommended for commercial applications. Its use in this application will void the warranty.

HIDEAWAY® **COMPACT** RANGE

COMPACT FEATURES

COMPACT
Compact design to maximise space utilisation – the biggest bucket for the smallest space. Door pull models are available in two colours: **Artic White and Cinder.**

SOFT CLOSE RUNNERS
High quality ball bearing soft close runners for smooth, light movement.

INSTALLATION OPTIONS
Door pull (illustrated opposite) or handle pull. Top, side and floor mount options. Floor mount models are a great retro-fit option (refer page 30).

PUSH TO OPEN
Compatible with electronic systems for handleless push to open functionality.

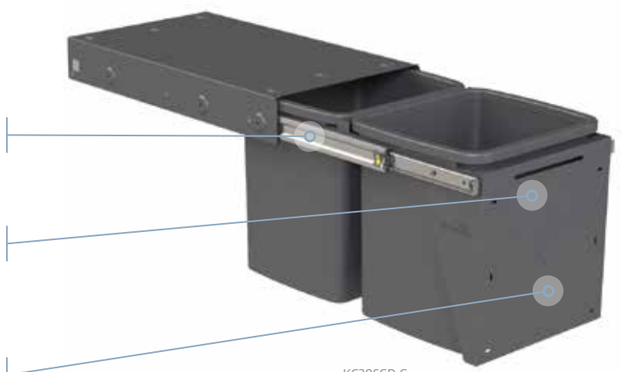
KC30SCD-C

kitchen

bathroom

laundry

motorhome

RANGE SPECIFICATIONS

METAL FRAME
1.0mm zinc treated steel, powder coated for durability.

DOOR BRACKET ADJUSTMENT
Vertical, horizontal and pitch adjustment provided in door bracket.

RUNNER RATING
Soft close over extension ball bearing runner. 45kg dynamic weight loading for KC235 and KC240 models. 38kg dynamic weight loading for all other models.

BUCKETS
Made from a recyclable, food-grade polypropylene plastic. Buckets come complete with a liner holder to hold your bin liner in place.

AIR VENTS
Unique air vent system to maximise bin liner volume. 35L and 40L models only. See page 32 for more details.

INSTALLATION OPTIONS
DOOR PULL - One Step Action. The front fascia of the cabinet is attached to the door bracket of the Hideaway Bin. The bin is accessible by simply pulling open the cabinet door.

HANDLE PULL - Two Step Action. The bin is accessible by opening the cupboard door and pulling out the bin using its handle.

MOUNTING OPTIONS
Top mount and/or side mount options to give greater design flexibility to install the bin in the optimal position.

BENCH OVERHANG CLEARANCE
Hideaway Compact Bins have been designed with over extension drawer runners which allow for a bench overhang of up to 35mm, allowing the back bucket to come clear independent of the front bucket. If more bench overhang clearance is required, please mount the bin lower in the cabinet.

PRODUCT CODES
Hideaway Bin codes appear in blue (eg KC30SCD-C). Use these codes when placing an order for your Hideaway Bin.

NOTE: The Hideaway Compact range is designed for residential use and is not recommended for commercial applications. Its use in this application will void the warranty. NZ Patent No: 530285 AUS Patent No: 2004240179

1 x 15 litre bucket
260mm w x 310mm h x 360mm d

Available in:
KC15SCH-W* / Handle Pull / Arctic White
KC15SCD-W / Door Pull / Arctic White
KC15SCD-C / Door Pull / Cinder

Bathroom vanities or motor homes.

2 x 15 litre buckets
300mm w x 310mm h x 510mm d

Available in:
KC30SCH-W / Handle Pull / Arctic White
KC30SCD-W / Door Pull / Arctic White
KC30SCD-C* / Door Pull / Cinder

2 x units can be installed within a 720mm standard carcass height providing a four bin recycling solution. Allows for 16mm shelf.

1 x 20 litre bucket
260mm w x 415mm h x 360mm d

Available in:
KC20SCH-W* / Handle Pull / Arctic White
KC20SCD-W / Door Pull / Arctic White
KC20SCD-C / Door Pull / Cinder

Ideal for cabinets with limited space.

2 x 20 litre buckets
300mm w x 415mm h x 510mm d

Available in:
KC40SCH-W / Handle Pull / Arctic White
KC40SCD-W* / Door Pull / Arctic White
KC40SCD-C / Door Pull / Cinder

Ideal recycling solution for the average family.

2 x 35 litre buckets
368mm w x 615mm h x 518mm d

Available in:
KC235SCH-W / Handle Pull / Arctic White
KC235SCD-W* / Door Pull / Arctic White
KC235SCD-C / Door Pull / Cinder

Large 70L capacity, yet fits a 400mm wide cabinet.

1 x 40 litre bucket
268mm w x 615mm h x 440mm d

Available in:
KC140SCH-W / Handle Pull / Arctic White
KC140SCD-W / Door Pull / Arctic White
KC140SCD-C* / Door Pull Cinder

Large bucket capacity for those looking for a single bin waste or recycling solution for areas of limited width. Ideal for 300mm wide cabinet.

2 x 40 litre buckets
418mm w x 615mm h x 518mm d

Available in:
KC240SCH-W / Handle Pull / Arctic White
KC240SCD-W / Door Pull / Arctic White
KC240SCD-C* / Door Pull / Cinder

Largest available double bin solution - 80L.

1 x 50 litre bucket
340mm w x 590mm h x 440mm d

Available in:
KC50SCH-W* / Handle Pull / Arctic White
KC50SCD-W / Door Pull / Arctic White

Ideal for a larger family kitchen.

INSTALLATION INSTRUCTIONS -
All measurements given are internal (wall to wall) and are the minimum required to fit each unit.

IMPORTANT NOTE FOR HANDLE PULL MODELS - Allowance should be made for the width of the bin to clear the door and hinge mechanisms. For top mounted models, installation also requires that the top door hinge be 150mm from the top of the door to allow clearance for the bin handle.

*Pictured Models

COMPACT MODELS

SPACE RESTRICTIONS?

HIDEAWAY FLOOR MOUNT SOLUTIONS

kitchen bathroom laundry motorhome

When it's not possible to find space to mount your bin at bench height, Hideaway has a range of bin solutions that can mount to the base or floor of a cabinet and fit around existing plumbing.

Single bucket options are suitable for small spaces, such as bathroom vanities or tight under sink spaces. Double bucket models can be used for waste and recycling where space allows. Installation is simple, making these a great option for DIY projects or retrofitting to existing cabinets.

A fully enclosed, durable, one-piece metal frame means no assembly required. These floor mount bins take just 6 screws into the base of the cabinet and it's installed and ready to use!

HIDEAWAY 15L BINS FOR AREAS WITH LIMITED SPACE

Use the 15L bin for disposal of your bathroom waste. The Hideaway Compact 15L Bin allows sink plumbing to be directed behind the bin, allowing more room in the other drawers or cupboards for personal items.

A single 15L Hideaway Compact Bin could also be installed beneath a shelf or sink to hold bulk laundry powder or used as a space-saving waste solution for motor homes.

See the Hideaway Compact Range for more information on the 15L model on page 27.

DELUXE 15L MODEL

2 x 15 litre buckets Floor Mounted

306mm w x 348mm h x 520mm d

Available in:
KK4F* / Handle Pull / Arctic White

Quality under sink solution with built in lid to control odours. See important installation notes on pg 31.

*Pictured Models

COMPACT RANGE FEATURES:
Refer page 27

DELUXE RANGE FEATURES:
Refer page 31

DELUXE & FLOOR MOUNT INSTALLATION INSTRUCTIONS - All measurements given are internal (wall to wall) and are the minimum required to fit each unit.

IMPORTANT NOTE FOR HANDLE PULL MODELS - Models KCF115SCH, KCF120SCH, KCF215SCH, KCF220SCH - if hinges are used that do not allow the door to clear the opening fully, allow an extra 10mm width (check as this may vary).

COMPACT FLOOR MOUNT MODELS

1 x 15 litre bucket Floor Mounted

258mm w x 305mm h x 358mm d

Available in:
KCF115SCH-W / Handle Pull / Arctic White
KCF115SCH-C* / Handle Pull / Cinder

1 x 20 litre bucket Floor Mounted

258mm w x 408mm h x 358mm d

Available in:
KCF120SCH-W* / Handle Pull / Arctic White
KCF120SCH-C / Handle Pull / Cinder

2 x 15 litre buckets Floor Mounted

298mm w x 308mm h x 510mm d

Available in:
KCF215SCH-W* / Handle Pull / Arctic White
KCF215SCH-C / Handle Pull / Cinder
KCF215SCD-W / Door Pull / Arctic White
KCF215SCD-C / Door Pull / Cinder

2 x 20 litre buckets Floor Mounted

298mm w x 408mm h x 510mm d

Available in:
KCF220SCH-W / Handle Pull / Arctic White
KCF220SCH-C / Handle Pull / Cinder
KCF220SCD-W / Door Pull / Arctic White
KCF220SCD-C* / Door Pull / Cinder

HIDEAWAY® **DELUXE** RANGE

BUILT-IN LID
Removable, foam-sprung friction-fitted lid that covers over the bucket/s when the unit is closed, assisting in odour control.

CLINIKILL™
The lid has a Clinikill™ antibacterial powder coat to fight harmful bacteria, yeast and fungi keeping the bin solution hygienic.

INSTALLATION OPTIONS
Door pull, handle pull (illustrated opposite) and floor mount options. Floor mount models are a great retro-fit option (see pg 30).

BUCKETS
Made from a recyclable, food-grade polypropylene plastic. Buckets come complete with a liner holder to hold your bin liner in place.

METAL FRAME
1.0mm zinc treated steel, powder coated for durability.

ADJUSTMENT
Vertical, horizontal and pitch adjustment provided in door bracket. Forward/back adjustment is provided on the centre fixings of the top mount panel.

RUNNER RATING
Manual open and close over extension ball bearing runner. 40kg dynamic weight loading for all models.

MOUNTING OPTIONS
Top mount and/or side mount options to give greater design flexibility to install the bin in the optimal position.

INSTALLATION OPTIONS
DOOR PULL - One Step Action. The front fascia of the cabinet is attached to the door bracket of the Hideaway Bin. The bin is accessible by simply pulling open the cabinet door.

HANDLE PULL - Two Step Action. The bin is accessible by opening the cupboard door and pulling out the bin using its handle.

IMPORTANT NOTE FOR HANDLE PULL MODELS - Models KK4H, KK12H, KK4F (pg 30) - if hinges are used that do not allow the door to clear the opening fully, allow an extra 10mm width (check as this may vary).

BENCH OVERHANG CLEARANCE
Hideaway Deluxe Bins have been designed with over extension drawer runners which allow for a bench overhang of up to 35mm, allowing the back bucket to come clear independent of the front bucket. If more bench overhang clearance is required, please mount the bin lower in the cabinet.

PRODUCT CODES
Hideaway Bin codes appear in blue (eg KK6D). Use these codes when placing an order for your Hideaway Bin.

2 x 15 litre buckets
300mm w x 340mm h x 520mm d

Available in:
KK4H / Handle Pull / Arctic White
KK6D* / Door Pull / Arctic White

2 x units can be installed within the standard carcass height providing a four bin recycling solution. NOTE: Standard carcass height is 720mm internal and allows for a 16mm shelf.

2 x 20 litre buckets
300mm w x 450mm h x 520mm d

Available in:
KK12H / Handle Pull / Arctic White
KK12D* / Door Pull / Arctic White

1 x 50 litre bucket
340mm w x 625mm h x 417mm d

Available in:
KK8D / Door Pull / Arctic White

*Pictured Models

MORE THAN **JUST A** BUCKET

HIDEAWAY 35L & 40L BUCKETS WITH **UNIQUE AIR VENT SYSTEM**

Four air vents allow trapped air to escape through the lip of the bucket, as the bin liner is filled during use.

This unique design will eliminate the frustration of trapped air restricting your liner, maximising bin liner volume.

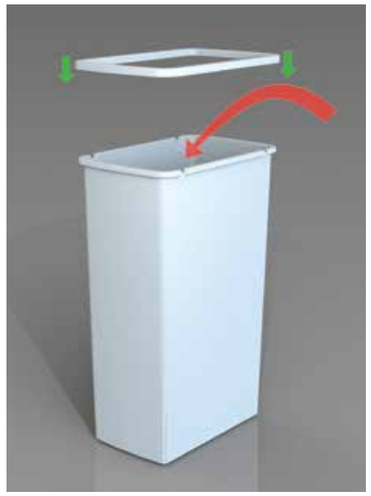

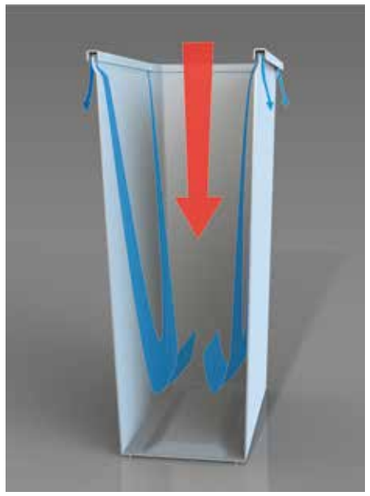

MATERIALS: DURABLE, FOOD-GRADE AND RECYCLABLE

Hideaway buckets are made with virgin polypropylene, giving them the durability to cope with the tough daily demands of the kitchen environment. The food-grade polypropylene material is FDA (U.S.A) approved, meaning Hideaway buckets can be used for bulk food storage of dry food stuffs. At the end of the life-cycle, the bucket is fully recyclable to minimise environmental impact.

Bucket Options
Available in:

15L Bucket
White, Ghost Grey or Cinder

20L Bucket
White, Ghost Grey or Cinder

35L Bucket
White or Cinder

40L Bucket
White or Cinder

50L Bucket
White

60L Hamper
White

LINER HOLDERS

All buckets used in Hideaway Bins come with matching Liner Holders, to hold bin liner bags in place. This not only looks tidy, it keeps your bin liner clean for removal and ensures the liner bags don't slip inside the bucket.

Dimensions available on our website.

Liner Holders
Available in:

15L and 20L / White, Ghost Grey or Cinder
35L / White or Cinder
40L / White or Cinder
50L / White

15L bucket with liner holder above

Learn more about
HIdeaway

SCAN ME

HIDEAWAY BINS ARE PROUDLY DESIGNED AND MADE IN NEW ZEALAND BY KITCHEN KING® LTD AND HAVE A STRONG LOCAL AND INTERNATIONAL REPUTATION FOR THE QUALITY AND INNOVATION OF OUR HIDDEN WASTE, RECYCLING AND LAUNDRY SOLUTIONS.

Kitchen King is a 100% family owned and operated business and has been under the direction of the Bertelsen family since 2006. Our company is run with joint directorship by close father and daughter team, Allen and Jamie Bertelsen.

Our team at Kitchen King not only manufacture and distribute Hideaway Bins but have expanded to include research and design, to ensure we are able to release new and innovative products to the market as required.

With an industry leading engineering and manufacturing process the team at Kitchen King continue to produce creative solutions for both residential and commercial storage, waste and recycling requirements.

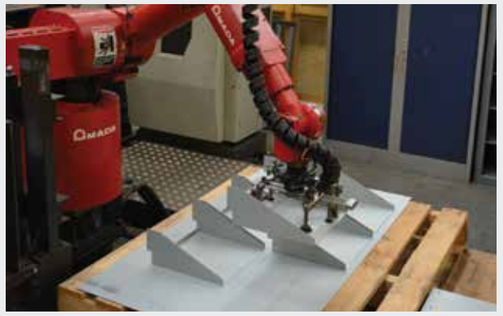

METAL MANUFACTURING

The framework of Hideaway Bins are manufactured using 1.0-1.2mm zinc treated steel to provide excellent strength and durability.

All componentry is made using cutting edge sheet metal technology, including CNC cutting, punching and forming to ensure we are using the best possible manufacturing solutions.

UNIQUE POWDER COATING

All metal components are powder coated to provide a tough yet attractive finish.

To improve the overall resistance of the coating, all individual metal parts undergo an iron phosphate pre-treatment and are then subjected to an acidic bath.

The powder coat is then electrostatically charged to ensure even coverage, and applied manually using a hand gun to ensure maximum coverage. The powder coating is then cured under heat to allow it to form a hard finish.

PLASTICS MANUFACTURING

Kitchen King has designed and invested in tooling to create our range of Hideaway buckets.

All Hideaway plastics are produced to stringent quality standards. Being made from virgin materials ensures the finished product has outstanding durability and is fully recyclable.

BIN ASSEMBLY

Once all Hideaway Bin components are ready for assembly, our Product Technicians assemble the bins at our warehouse in Silverdale, Auckland, NZ. This assembly process allows for all parts to be checked to ensure the highest quality end product.

Concelo.
BY HIDEAWAY

"A sophisticated product solution, this kitchen waste bin convinces thanks to its automatic, odour controlling closing mechanism."
- Judge's comment, Germany 2019

A ONCE IN A LIFETIME RED DOT AWARD! A MILESTONE FOR HIDEAWAY AND FOR NEW ZEALAND PRODUCT DESIGN.

The prestigious international Red Dot Design Awards pay tribute to the best manufacturers and designers of the year. In 2019 there were 5,500 entries from around the world, and only the best products convinced the experts. The manufacturers and designers from the international design scene that created these products were honoured and celebrated on 8 July 2019, at the Red Dot award ceremony in Essen, Germany.

Allen and Jamie enjoyed celebrating this honour in Germany and found themselves mixing among some of the best design companies in the world such as Ferrari, (who won the Design Team of the Year) as well as Apple, Bosch, Grohe, Hyundai, LG, Philips and Sony to name a few.

The Concelo waste bin is now on display in the Red Dot Museum in Essen, alongside other award-winning products. It is also forever featured in the 2019 Red Dot DOING year book where the international design community draw inspiration for future products and stay on top of the latest product trends paving the way forward.

Hideaway®

hideawaybins.com.au

Concelo®

hideawaybins.com.au/concelo

Manufactured by Kitchen King Limited
44 Anvil Road, Silverdale,
Auckland 0932, New Zealand

Australia
Freephone 1800 042 642
hideawaybins.com.au

Scan the QR code with your mobile phone camera to learn more about Hideaway

SCAN ME

NEW ZEALAND MADE®

Scan the QR code with your mobile phone camera to learn more about Concelo

SCAN ME

PATENT PENDING: **concelo.com/ip**

HOW TO ORDER

Hideaway Bins can be purchased from Galvin Hardware and also direct from our website: **hideawaybins.com.au**

GALVIN

galvinhw.com.au / 08 9446 6333

Galvin Hardware Head Office, Osborne Park
39 Howe Street, Osborne Park,
WA 6017
Ph: (08) 9446 6333
Fax: (08) 9446 8865
hardware@galvinhw.com.au

Galvin Hardware, Bunbury
31A Shanahan Road, Bunbury,
WA 6230
Ph: (08) 9725 4812
Fax: (08) 9725 4809
bunbury@galvinhw.com.au

Galvin Hardware, Wangara
Unit 2, 6 Ismail Street, Wangara,
WA 6065
Ph: (08) 9309 6333
Fax: (08) 9309 6899
wangara@galvinhw.com.au

Galvin Hardware, Adelaide
14 Murray Street, Thebarton,
SA 5031
Ph: (08) 8352 1888
Fax: (08) 8352 1666
adelaide@galvinhw.com.au

Hideaway bins are designed and manufactured in New Zealand. Kitchen King® Limited reserve the rights to this brochure under copyright law. It shall not be permissible to duplicate this brochure in any form, either in whole or in part, without our written consent. Subject to technical alterations. Errors and omissions excepted 2020/2021.